# -U16F -44kg 3k+

## Competitors/Compétiteurs A

| # | Name/Nom | Grade | Club | 1 | 2 | 3 | 4 | W/G | Pts | Pos |
|---|---|---|---|---|---|---|---|---|---|---|
| 1 | TURMEL Ariane | 3k | QC/Blainville | XX | | | | 0 | 0 | 4 |
| 2 | HUART Maeva | 2k | QC/Torii | 10 | XX | | | 1 | 10 | 3 |
| 3 | MINIER Annabel | 3k | QC/St-Paul l'Ermite | 10 | 10 | XX | 10 | 3 | 30 | 1 |
| 4 | GOUGEON Ariane | 2k | QC/Olympique | 10 | 10 | | XX | 2 | 20 | 2 |

## Pool A

| Match | White/Blanc | | | Blue/Bleu | Res/Rés | Tim/Tmp | Code |
|---|---|---|---|---|---|---|---|
| D-26 | TURMEL Ariane | 1 | 2 | **HUART Maeva** | 0 - 10 | 1:08 | WIP |
| D-27 | **MINIER Annabel** | 3 | 4 | GOUGEON Ariane | 10 - 0 | 0:45 | IPO |
| D-40 | TURMEL Ariane | 1 | 3 | **MINIER Annabel** | 0 - 10 | 1:50 | WIP |
| D-41 | HUART Maeva | 2 | 4 | **GOUGEON Ariane** | 0 - 10 | 1:42 | WIP |
| D-52 | TURMEL Ariane | 1 | 4 | **GOUGEON Ariane** | 0 - 10 | 0:54 | WIP |
| D-53 | HUART Maeva | 2 | 3 | **MINIER Annabel** | 0 - 10 | 1:51 | IPO |

## Competitors/Compétiteurs B

| # | Name/Nom | Grade | Club | 5 | 6 | 7 | W/G | Pts | Pos |
|---|---|---|---|---|---|---|---|---|---|
| 5 | SNANI Malak | 3k | QC/Olympique | XX | | | 0 | 0 | 3 |
| 6 | JOBIN Rosalie | 2k | QC/Jonquiere | 10 | XX | | 1 | 10 | 2 |
| 7 | DIOME Claire | 2k | QC/Tritton | 10 | 10 | XX | 2 | 20 | 1 |

## Pool B

| Match | White/Blanc | | | Blue/Bleu | Res/Rés | Tim/Tmp | Code |
|---|---|---|---|---|---|---|---|
| D-28 | SNANI Malak | 5 | 6 | **JOBIN Rosalie** | 0 - 10 | 1:58 | WIP |
| D-42 | SNANI Malak | 5 | 7 | **DIOME Claire** | 0 - 10 | 0:31 | IPO |
| D-54 | JOBIN Rosalie | 6 | 7 | **DIOME Claire** | 0 - 10 | 1:02 | IPO |

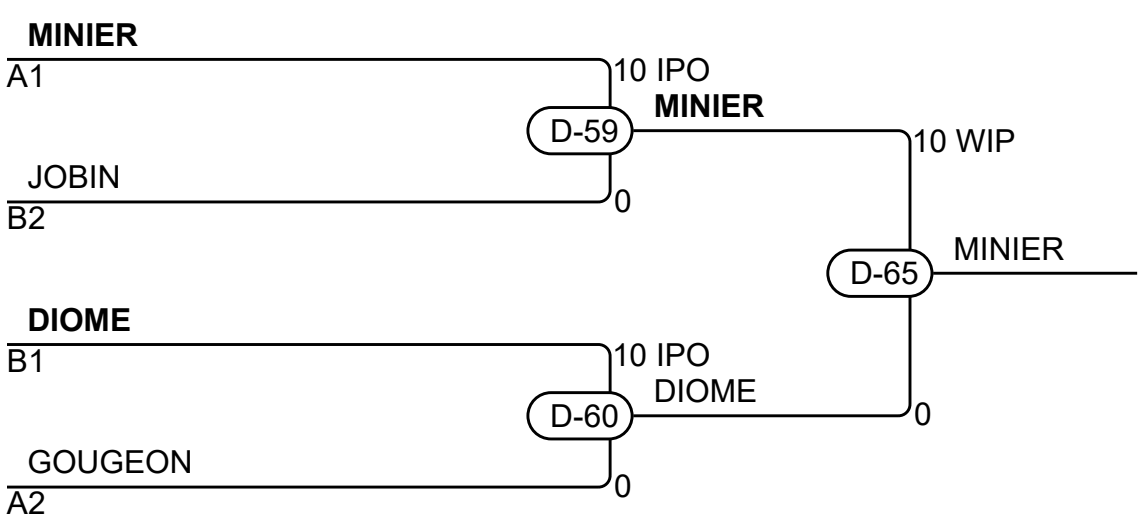


## Results/Résultats

| Pos | Name/Nom |
|---|---|
| 1 | MINIER Annabel, QC/St-Paul l'Ermite |
| 2 | DIOME Claire, QC/Tritton |
| 3 | JOBIN Rosalie, QC/Jonquiere |
| 3 | GOUGEON Ariane, QC/Olympique |