U16F 3k+ -70kg

Competitors/Compétiteurs A

#	Name/Nom	Grade	Club	1	2	3	W/G	Pts	Pos
1	PINARD Gabrielle (70,10)	3k	Val-des-Sources	XX		10	1	10	2
2	DUBE Juliann (69,10)	2k	Port-Cartier	10	XX	10	2	20	1
3	GABBASSI Basma (70,20)	2k	Longueuil			XX	0	0	3

Pool A

Match	White/Blanc			Blue/Bleu	Res/Rés	Tim/Tmp	Code
C-41	PINARD Gabrielle	1	2	**DUBE Juliann**	0 - 10	1:26	IPO
C-45	**PINARD Gabrielle**	1	3	GABBASSI Basma	10 - 0	1:47	IPO
C-51	**DUBE Juliann**	2	3	GABBASSI Basma	10 - 0	0:42	IPO

Competitors/Compétiteurs B

#	Name/Nom	Grade	Club	4	5	6	W/G	Pts	Pos
4	FAKHRIDDINOVA Shodguna (69	3k	Shidokan	XX		10	1	10	2
5	AARAB Yasmine (69,00)	3k	Beauport	10	XX	10	2	20	1
6	KUATE Gabrielle (64,60)	2k	Kachi			XX	0	0	3

Pool B

Match	White/Blanc			Blue/Bleu	Res/Rés	Tim/Tmp	Code
C-42	FAKHRIDDINOVA Shodguna	4	5	**AARAB Yasmine**	0 - 10	1:52	WIP
C-46	**FAKHRIDDINOVA Shodguna**	4	6	KUATE Gabrielle	10 - 0	0:50	IPO
C-52	**AARAB Yasmine**	5	6	KUATE Gabrielle	10 - 0	0:23	HAN

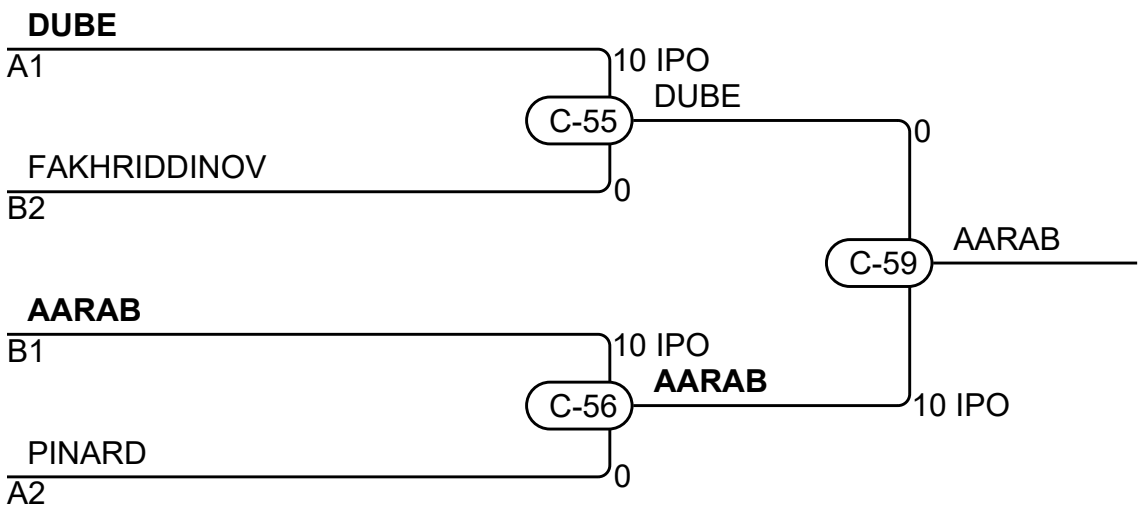

Results/Résultats

Pos	Name/Nom
1	AARAB Yasmine, Beauport
2	DUBE Juliann, Port-Cartier
3	FAKHRIDDINOVA Shodguna, Shidokan
3	PINARD Gabrielle, Val-des-Sources