U18F 3k+ -44kg

Competitors/Compétiteurs A

#	Name/Nom	Grade	Club	1	2	3	W/G	Pts	Pos
1	MELINTE Isabelle (43,40)	3k	Action Reaction	XX			0	0	3
2	SYER Rylee (43,50)	1k	Ishi Yama	10	XX	10	2	20	1
3	OLAYA Catherine (42,90)	3k	Otoshi	10		XX	1	10	2

Pool A

Match	White/Blanc			Blue/Bleu	Res/Rés	Tim/Tmp	Code
A-51	MELINTE Isabelle	1	2	**SYER Rylee**	0 - 10	1:52	IPO
A-61	MELINTE Isabelle	1	3	**OLAYA Catherine**	0 - 10	0:51	IPO
A-67	**SYER Rylee**	2	3	OLAYA Catherine	10 - 0	3:09	IPO

Competitors/Compétiteurs B

#	Name/Nom	Grade	Club	4	5	6	W/G	Pts	Pos
4	KHALAF Maria (42,90)	3k+	Ipe Dojo	XX	10		1	10	2
5	HUART Maeva (43,40)	1k	Olympique (Qc)		XX		0	0	3
6	ROBINSON Georgina (44,20)	2k	Full Circle	5	5	XX	2	10	1

Pool B

Match	White/Blanc			Blue/Bleu	Res/Rés	Tim/Tmp	Code
A-52	**KHALAF Maria**	4	5	HUART Maeva	10 - 0	1:05	IPO
A-62	KHALAF Maria	4	6	**ROBINSON Georgina**	0 - 5	4:00	YUK
A-68	HUART Maeva	5	6	**ROBINSON Georgina**	0 - 5	4:00	YUK

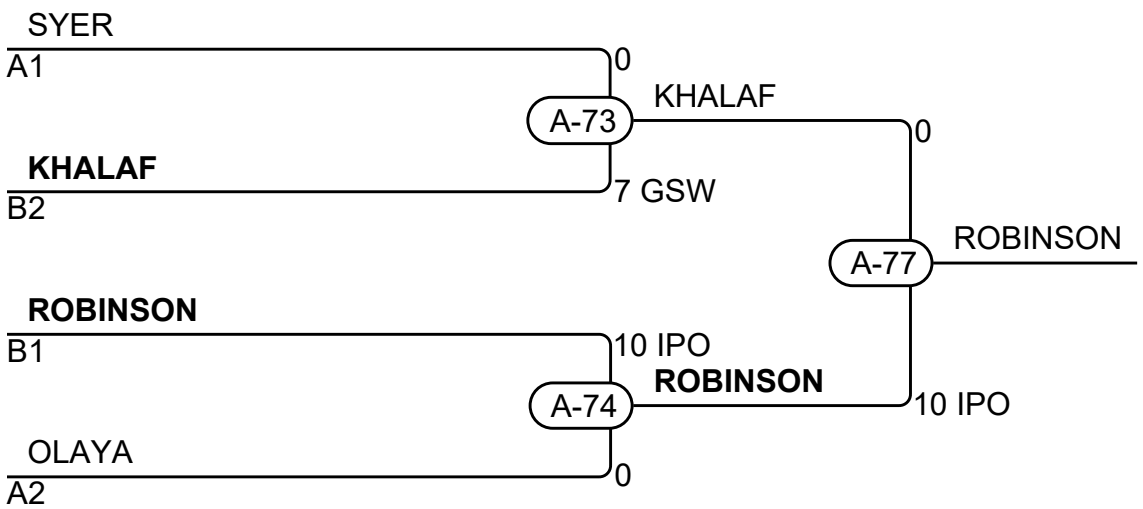

Results/Résultats

Pos	Name/Nom
1	ROBINSON Georgina, Full Circle
2	KHALAF Maria, Ipe Dojo
3	SYER Rylee, Ishi Yama
3	OLAYA Catherine, Otoshi