U21F 2k+ -78kg

Competitors/Compétiteurs A

#	Name/Nom	Grade	Club	1	2	3	W/G	Pts	Pos
1	BECKETT Olivia (75,20)	1k	Prince George	XX			0	0	3
2	FILLION Claudia (78,00)	1k	Seikidokan	10	XX	10	2	20	1
3	LAVOIE Abby (77,40)	1d	Ghishintaido	10		XX	1	10	2

Pool A

Match	White/Blanc			Blue/Bleu	Res/Rés	Tim/Tmp	Code
D-15	BECKETT Olivia	1	2	**FILLION Claudia**	0 - 10	1:42	WIP
D-22	BECKETT Olivia	1	3	**LAVOIE Abby**	0 - 10	2:40	IPO
D-31	**FILLION Claudia**	2	3	LAVOIE Abby	10 - 0	0:50	IPO

Competitors/Compétiteurs B

#	Name/Nom	Grade	Club	4	5	6	W/G	Pts	Pos
4	MORIN Florence (73,40)	2k	St-Hyacinthe	XX			0	0	3
5	CHAMBERS Silesitiale (73,5	1k	Sheffield Judo	10	XX		1	10	2
6	SMITH Abigail (77,50)	1d	Numa	10	7	XX	2	17	1

Pool B

Match	White/Blanc			Blue/Bleu	Res/Rés	Tim/Tmp	Code
D-16	MORIN Florence	4	5	**CHAMBERS Silesitiale**	0 - 10	0:10	IPO
D-23	MORIN Florence	4	6	**SMITH Abigail**	0 - 10	0:00	FUS
D-32	CHAMBERS Silesitiale	5	6	**SMITH Abigail**	0 - 7	4:00	WAZ

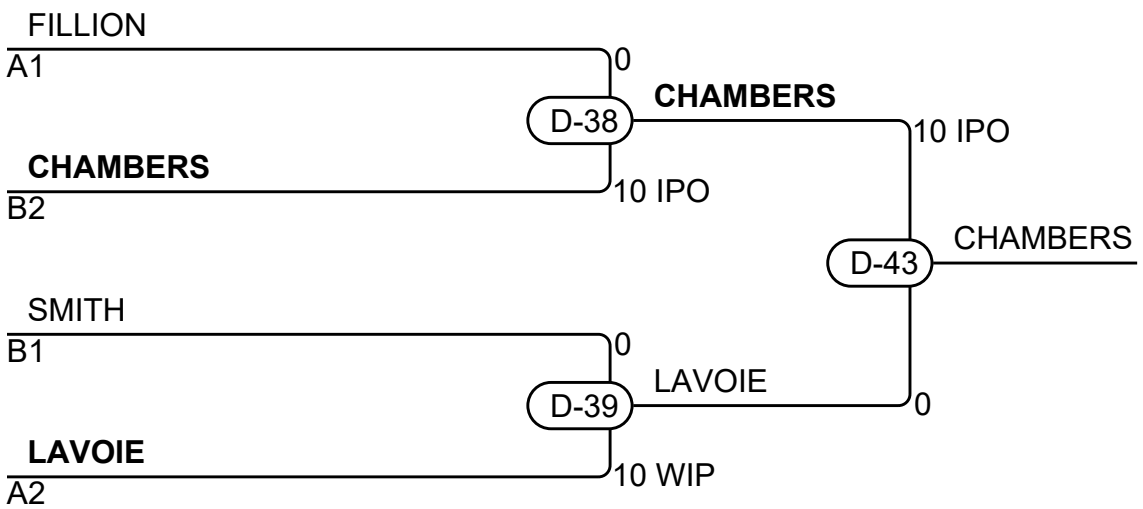

Results/Résultats

Pos	Name/Nom
1	CHAMBERS Silesitiale, Sheffield Judo
2	LAVOIE Abby, Ghishintaido
3	FILLION Claudia, Seikidokan
3	SMITH Abigail, Numa